Spherical plain bearing GE22 ZO ZEN

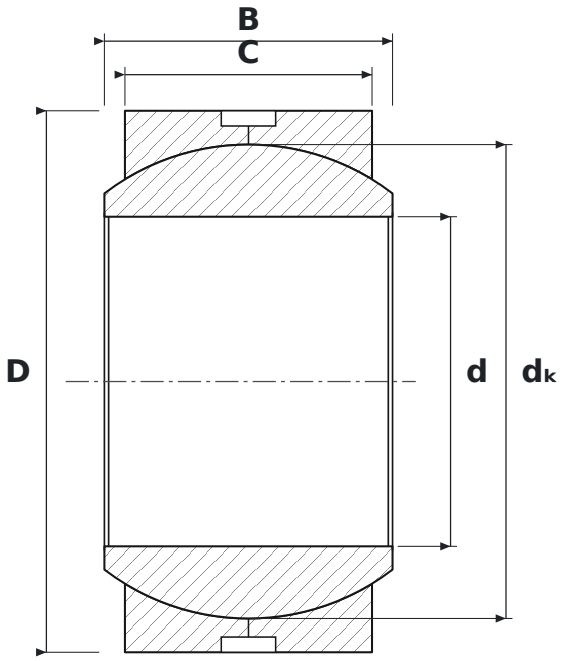

DIMENSIONS

d	bore diameter	**22.23 mm**
D	outside diameter	**36.51 mm**
B	inner ring (ball) width	**19.43 mm**
C	outer ring width	**16.66 mm**
dK	ball diameter	**31.95 mm**

SPECIFICATIONS

Manufacturer	**ZEN**
Manufacturer designation	**GE22 ZO**
C – outer ring width	**16.66 mm**
Rolling elements	**plain bearing (no rolling elements)**
Features	**Lubrication groove and holes**