Spherical plain bearing GE25 FW ZEN

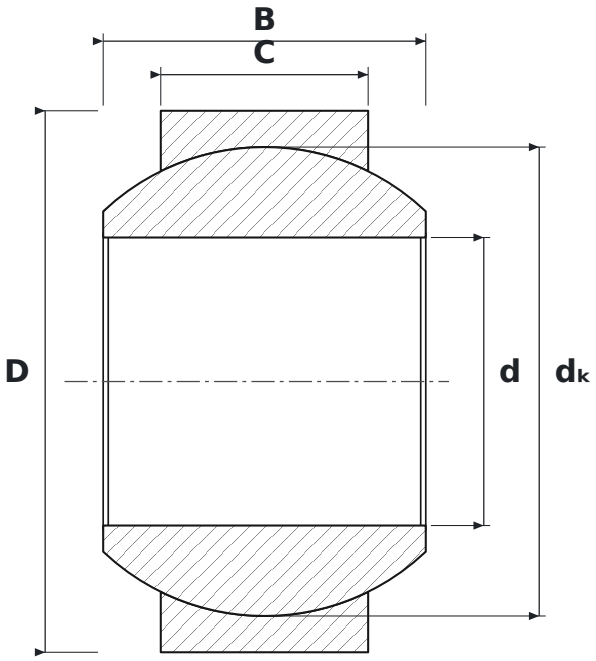

DIMENSIONS

d	bore diameter	**25 mm**
D	outside diameter	**47 mm**
B	inner ring (ball) width	**28 mm**
C	outer ring width	**18 mm**
dK	ball diameter	**40.7 mm**

SPECIFICATIONS

Manufacturer	**ZEN**
Manufacturer designation	**GE25 FW**
C – outer ring width	**18 mm**
Rolling elements	**plain bearing (no rolling elements)**
Mass	**0.2 kg**