Spherical plain bearing GE25 PW ZEN

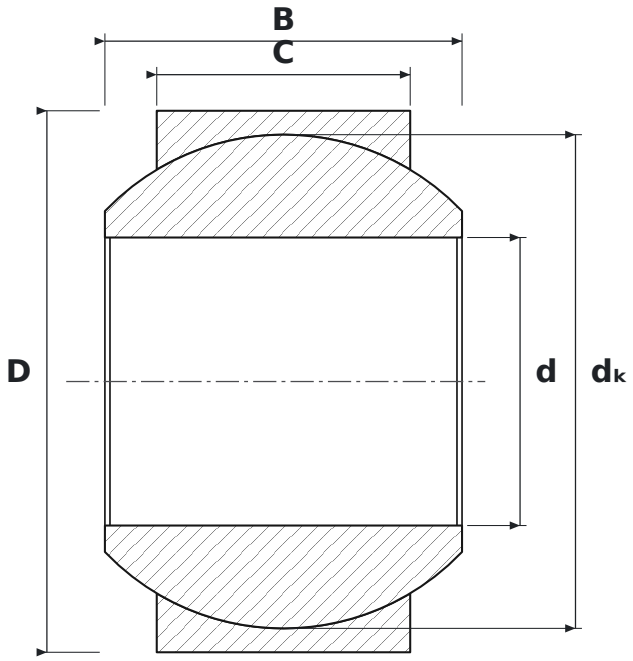

DIMENSIONS

d	bore diameter	**25 mm**
D	outside diameter	**47 mm**
B	inner ring (ball) width	**31 mm**
C	outer ring width	**22 mm**
dK	ball diameter	**42.85 mm**

SPECIFICATIONS

Manufacturer	**ZEN**
Manufacturer designation	**GE25 PW**
C – outer ring width	**22 mm**
Rolling elements	**plain bearing (no rolling elements)**
Mass	**0.24 kg**