Spherical plain bearing GE30 AW ZEN

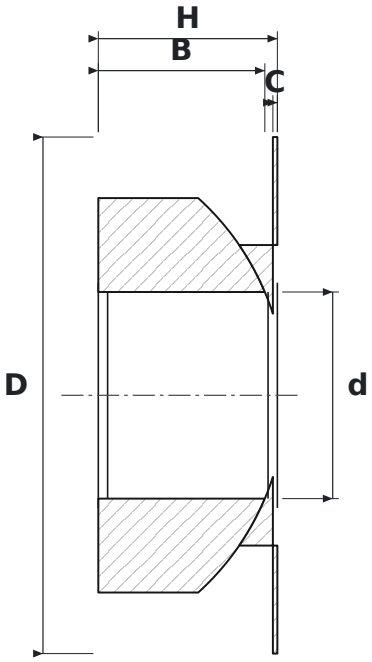

DIMENSIONS

d	bore diameter	**30 mm**
D	outside diameter	**75 mm**
H	height	**26 mm**
B	inner ring (ball) width	**26 mm**
C	outer ring width	**0.65 mm**

SPECIFICATIONS

Manufacturer	**ZEN**
Manufacturer designation	**GE30 AW**
C – outer ring width	**0.65 mm**
Rolling elements	**plain bearing (no rolling elements)**
Mass	**0.652 kg**