# Spherical plain bearing GE30 AX ZEN

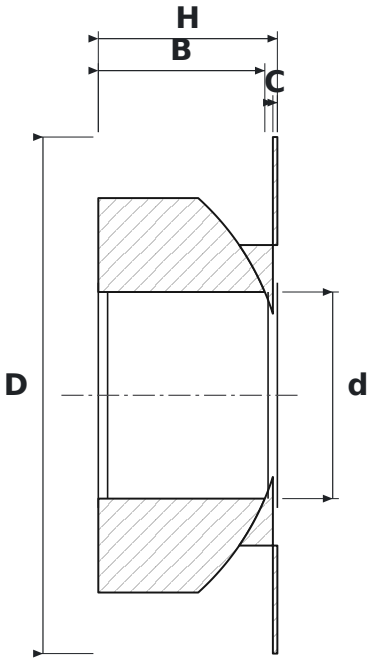


## DIMENSIONS

| | | |
|---|---|---|
| **d** | bore diameter | **30 mm** |
| **D** | outside diameter | **75 mm** |
| **H** | height | **26 mm** |
| **B** | inner ring (ball) width | **26 mm** |
| **C** | outer ring width | **0.65 mm** |

## SPECIFICATIONS

| | |
|---|---|
| Manufacturer | **ZEN** |
| Manufacturer designation | **GE30 AX** |
| C – outer ring width | **0.65 mm** |
| Rolling elements | **plain bearing (no rolling elements)** |
| Features | **Lubrication groove and holes** |
| Mass | **0.65 kg** |