# Spherical plain bearing GE30-UK-2TS INA

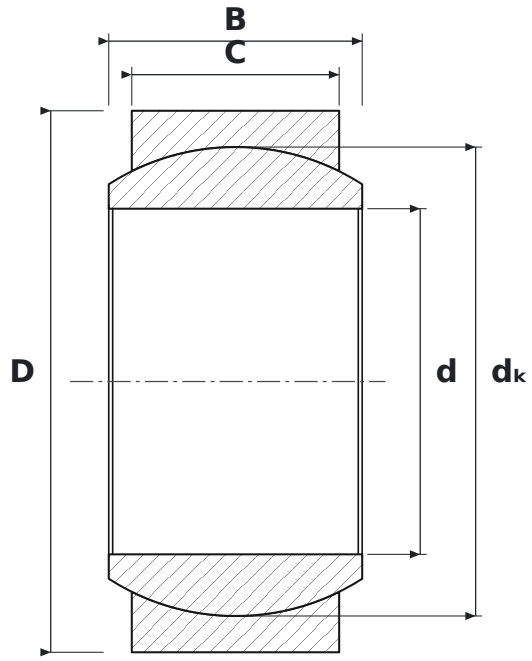


## DIMENSIONS

| | | |
|---|---|---|
| **d** | bore diameter | **30 mm** |
| **D** | outside diameter | **47 mm** |
| **B** | inner ring (ball) width | **22 mm** |
| **C** | outer ring width | **18 mm** |
| **dK** | ball diameter | **40.7 mm** |

## SPECIFICATIONS

| | |
|---|---|
| Manufacturer | **INA** |
| Manufacturer designation | **GE30-UK-2TS** |
| B – inner ring width | **22 mm** |
| C – outer ring width | **18 mm** |
| Rolling elements | **plain bearing (no rolling elements)** |
| Basic dynamic load rating C | **88 kN** |
| Basic static load rating C0 | **176 kN** |