Spherical plain bearing GE30 UK INA

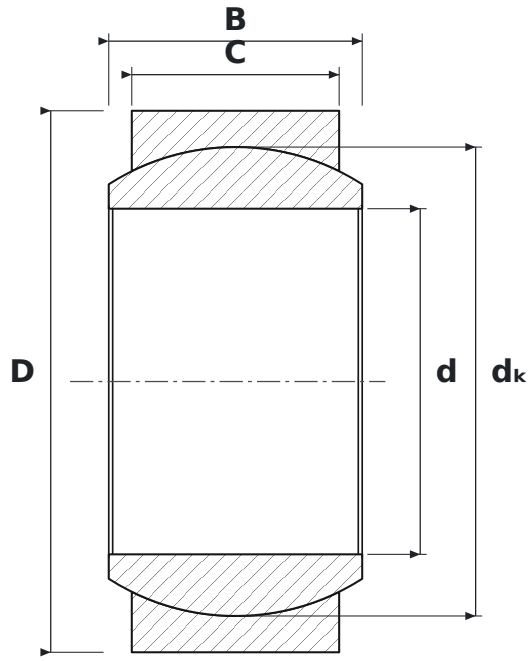

DIMENSIONS

d	bore diameter	**30 mm**
D	outside diameter	**47 mm**
B	inner ring (ball) width	**22 mm**
C	outer ring width	**18 mm**
dK	ball diameter	**40.7 mm**

SPECIFICATIONS

Manufacturer	**INA**
Manufacturer designation	**GE30 UK**
B – inner ring width	**22 mm**
C – outer ring width	**18 mm**
Rolling elements	**plain bearing (no rolling elements)**
Basic dynamic load rating C	**65.5 kN**
Basic static load rating C0	**166 kN**