Spherical plain bearing GE300 UK2RS INA

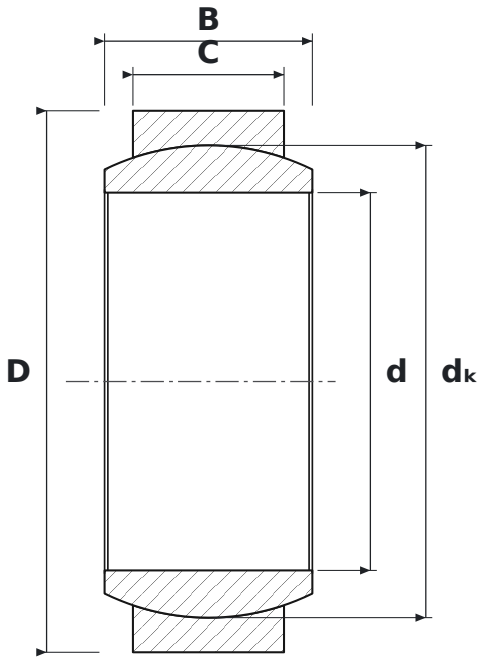

DIMENSIONS

d	bore diameter	**300 mm**
D	outside diameter	**430 mm**
B	inner ring (ball) width	**165 mm**
C	outer ring width	**120 mm**
dK	ball diameter	**375 mm**

SPECIFICATIONS

Manufacturer	**INA**
Manufacturer designation	**GE300 UK2RS**
B – inner ring width	**165 mm**
C – outer ring width	**120 mm**
Rolling elements	**plain bearing (no rolling elements)**
K	**tapered bore, taper 1:12**
2RS	**contact rubber seals, both sides**
Basic dynamic load rating C	**5,400 kN**
Basic static load rating C0	**10,800 kN**