Spherical plain bearing GE34 ZO INA

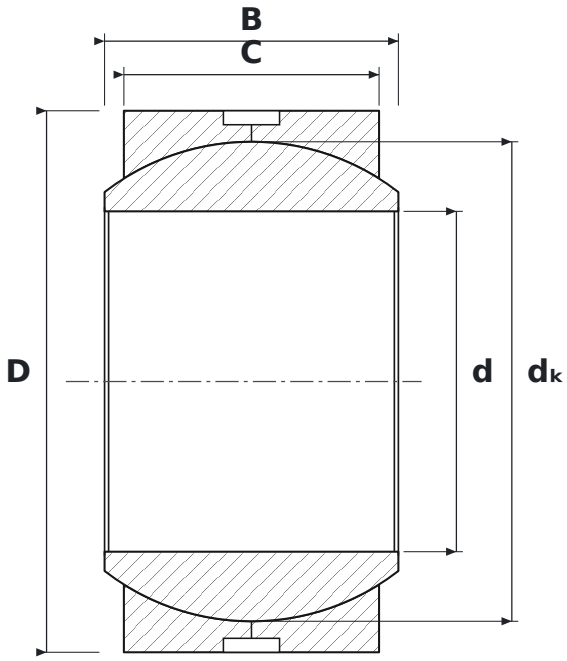

DIMENSIONS

d	bore diameter	**34.93 mm**
D	outside diameter	**55.56 mm**
B	inner ring (ball) width	**30.15 mm**
C	outer ring width	**26.19 mm**
dK	ball diameter	**49.2 mm**

SPECIFICATIONS

Manufacturer	**INA**
Manufacturer designation	**GE34 ZO**
B – inner ring width	**30.15 mm**
C – outer ring width	**26.19 mm**
Rolling elements	**plain bearing (no rolling elements)**
Features	**Lubrication groove and holes**