Spherical plain bearing GE35 AW ZEN

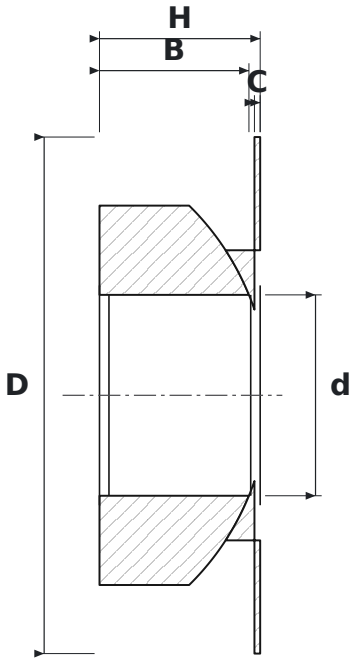

DIMENSIONS

d	bore diameter	**35 mm**
D	outside diameter	**90 mm**
H	height	**28 mm**
B	inner ring (ball) width	**28 mm**
C	outer ring width	**1 mm**

SPECIFICATIONS

Manufacturer	**ZEN**
Manufacturer designation	**GE35 AW**
C – outer ring width	**1 mm**
Rolling elements	**plain bearing (no rolling elements)**
Mass	**1 kg**