Spherical plain bearing GE35-UK-2TS INA

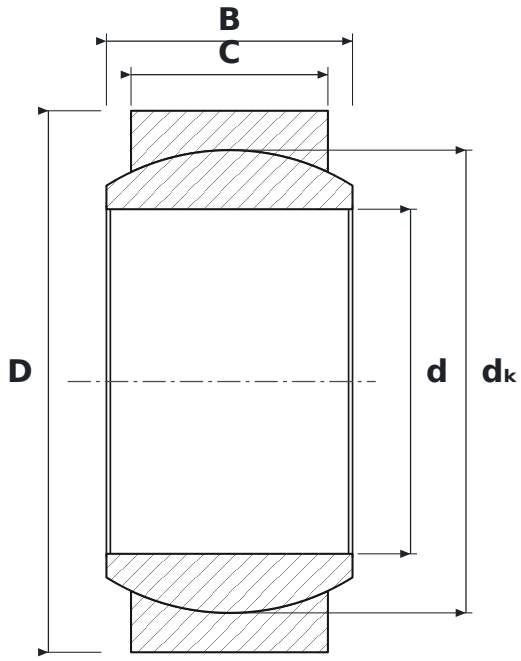

DIMENSIONS

d	bore diameter	**35 mm**
D	outside diameter	**55 mm**
B	inner ring (ball) width	**25 mm**
C	outer ring width	**20 mm**
dK	ball diameter	**47 mm**

SPECIFICATIONS

Manufacturer	**INA**
Manufacturer designation	**GE35-UK-2TS**
B – inner ring width	**25 mm**
C – outer ring width	**20 mm**
Rolling elements	**plain bearing (no rolling elements)**
Basic dynamic load rating C	**112 kN**
Basic static load rating C0	**224 kN**