Spherical plain bearing GE40 FW2RS ZEN

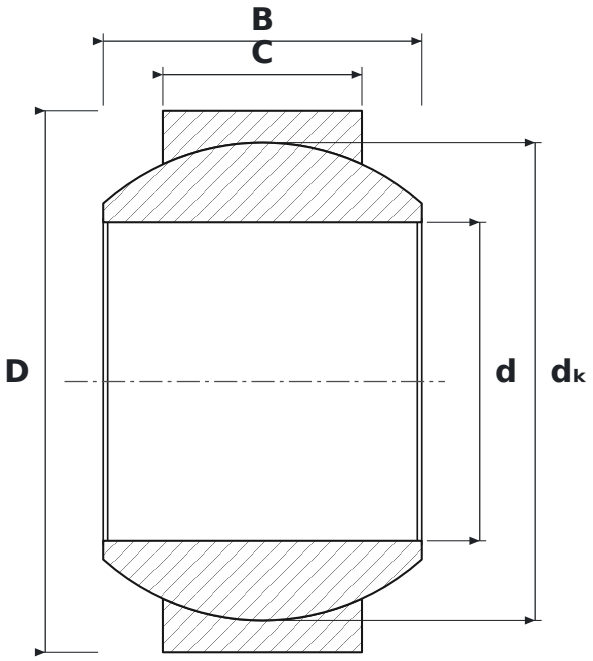

DIMENSIONS

d	bore diameter	**40 mm**
D	outside diameter	**68 mm**
B	inner ring (ball) width	**40 mm**
C	outer ring width	**25 mm**
dK	ball diameter	**60 mm**

SPECIFICATIONS

Manufacturer	**ZEN**
Manufacturer designation	**GE40 FW2RS**
C – outer ring width	**25 mm**
Rolling elements	**plain bearing (no rolling elements)**
Mass	**0.54 kg**