Spherical plain bearing GE40 LO INA

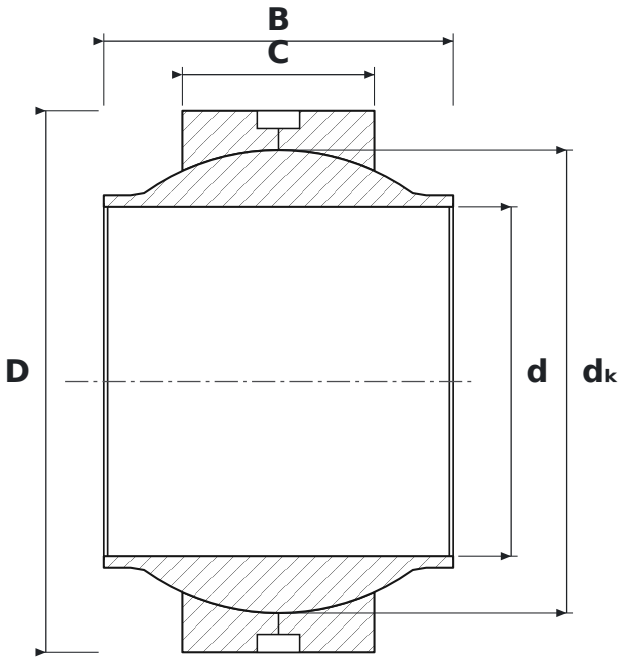

DIMENSIONS

d	bore diameter	**40 mm**
D	outside diameter	**62 mm**
B	inner ring (ball) width	**40 mm**
C	outer ring width	**22 mm**
dK	ball diameter	**53 mm**

SPECIFICATIONS

Manufacturer	**INA**
Manufacturer designation	**GE40 LO**
B – inner ring width	**40 mm**
C – outer ring width	**22 mm**
Rolling elements	**plain bearing (no rolling elements)**
Features	**Lubrication groove and holes**
Basic dynamic load rating C	**100 kN**
Basic static load rating C0	**500 kN**
Mass	**0.34 kg**