Spherical plain bearing GE40 LO ZEN

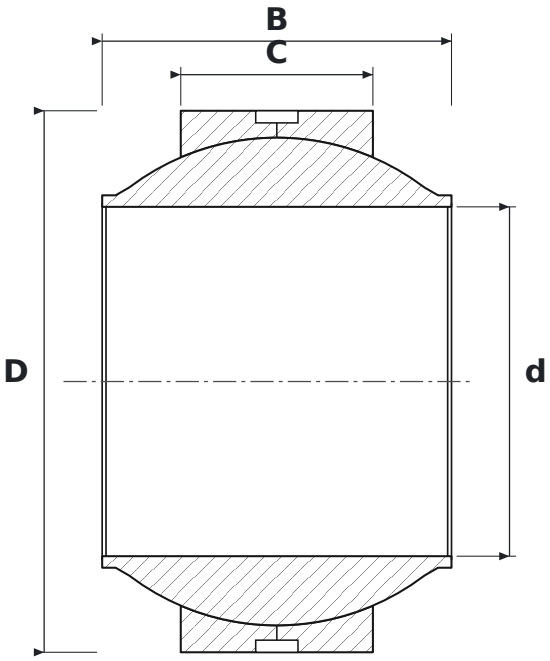

DIMENSIONS

d	bore diameter	**40 mm**
D	outside diameter	**62 mm**
B	inner ring (ball) width	**40 mm**
C	outer ring width	**22 mm**

SPECIFICATIONS

Manufacturer	**ZEN**
Manufacturer designation	**GE40 LO**
C – outer ring width	**22 mm**
Rolling elements	**plain bearing (no rolling elements)**
Features	**Lubrication groove and holes**
Mass	**0.34 kg**