# Spherical plain bearing GE45 SW ZEN

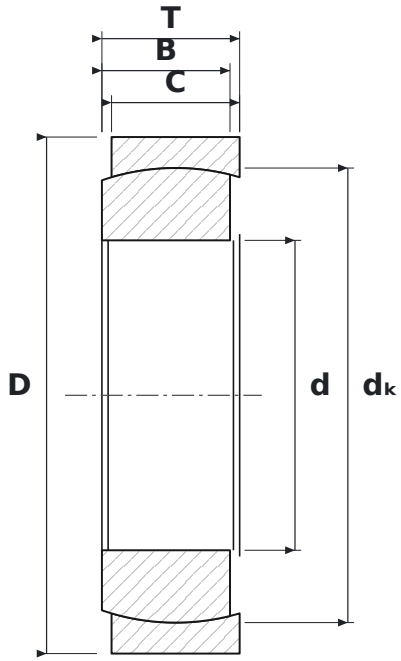


## DIMENSIONS

| | | |
|---|---|---|
| **d** | bore diameter | **45 mm** |
| **D** | outside diameter | **75 mm** |
| **T** | total width | **20 mm** |
| **B** | inner ring (ball) width | **20 mm** |
| **dK** | ball diameter | **66 mm** |

## SPECIFICATIONS

| | |
|---|---|
| Manufacturer | **ZEN** |
| Manufacturer designation | **GE45 SW** |
| Rolling elements | **plain bearing (no rolling elements)** |
| Mass | **0.432 kg** |