Spherical plain bearing GE45 SX ZEN

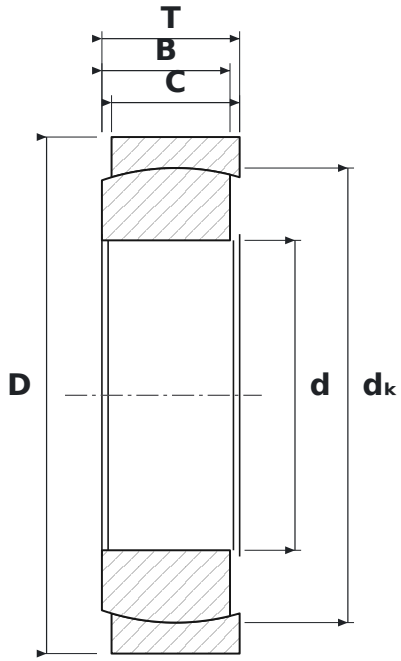

DIMENSIONS

d	bore diameter	**45 mm**
D	outside diameter	**75 mm**
T	total width	**20 mm**
B	inner ring (ball) width	**20 mm**
dK	ball diameter	**66 mm**

SPECIFICATIONS

Manufacturer	**ZEN**
Manufacturer designation	**GE45 SX**
Rolling elements	**plain bearing (no rolling elements)**
Features	**Lubrication groove and holes**
Mass	**0.42 kg**