Spherical plain bearing GE5 PB INA

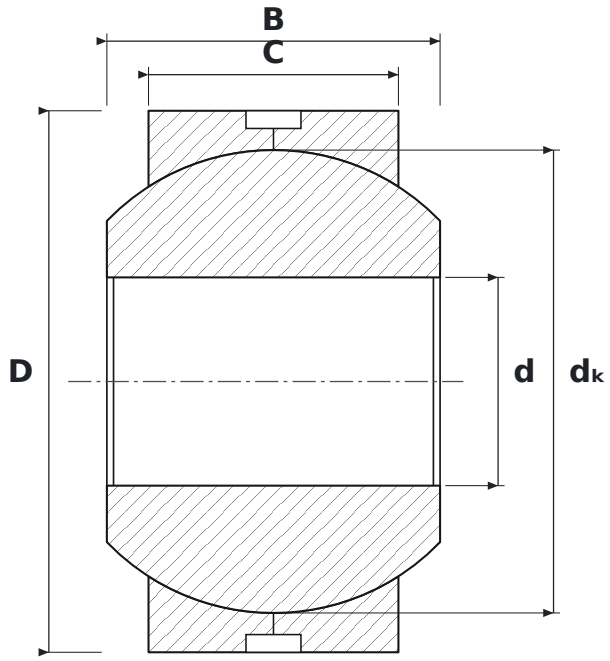

DIMENSIONS

d	bore diameter	**5 mm**
D	outside diameter	**13 mm**
B	inner ring (ball) width	**8 mm**
C	outer ring width	**6 mm**
dK	ball diameter	**11.11 mm**

SPECIFICATIONS

Manufacturer	**INA**
Manufacturer designation	**GE5 PB**
B – inner ring width	**8 mm**
C – outer ring width	**6 mm**
Rolling elements	**plain bearing (no rolling elements)**
Features	**Lubrication groove and holes**
Basic dynamic load rating C	**3.25 kN**
Basic static load rating C0	**8.5 kN**