Spherical plain bearing GE50 AX ZEN

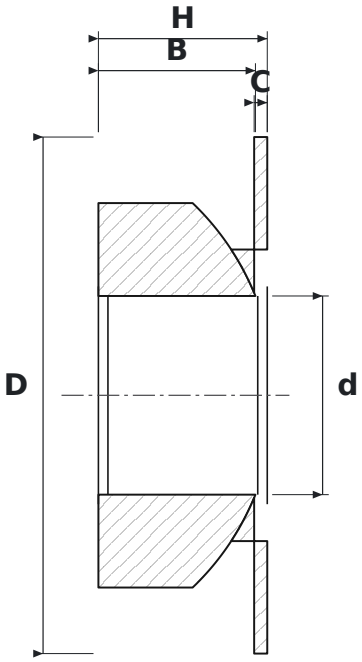

DIMENSIONS

d	bore diameter	**50 mm**
D	outside diameter	**130 mm**
H	height	**42.5 mm**
B	inner ring (ball) width	**42.5 mm**
C	outer ring width	**3.3 mm**

SPECIFICATIONS

Manufacturer	**ZEN**
Manufacturer designation	**GE50 AX**
C – outer ring width	**3.3 mm**
Rolling elements	**plain bearing (no rolling elements)**
Features	**Lubrication groove and holes**
Mass	**3.4 kg**