Spherical plain bearing GE50-DO-2TS INA

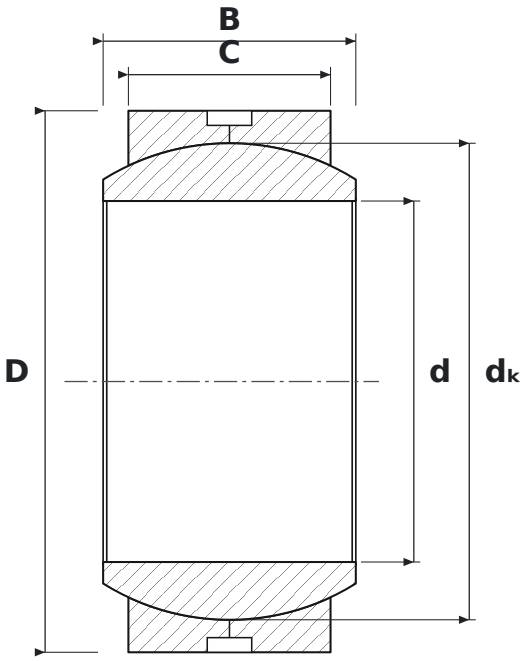

DIMENSIONS

d	bore diameter	**50 mm**
D	outside diameter	**75 mm**
B	inner ring (ball) width	**35 mm**
C	outer ring width	**28 mm**
dK	ball diameter	**66 mm**

SPECIFICATIONS

Manufacturer	**INA**
Manufacturer designation	**GE50-DO-2TS**
B – inner ring width	**35 mm**
C – outer ring width	**28 mm**
Rolling elements	**plain bearing (no rolling elements)**
Features	**Lubrication groove and holes**