Spherical plain bearing GE6 UK ZEN

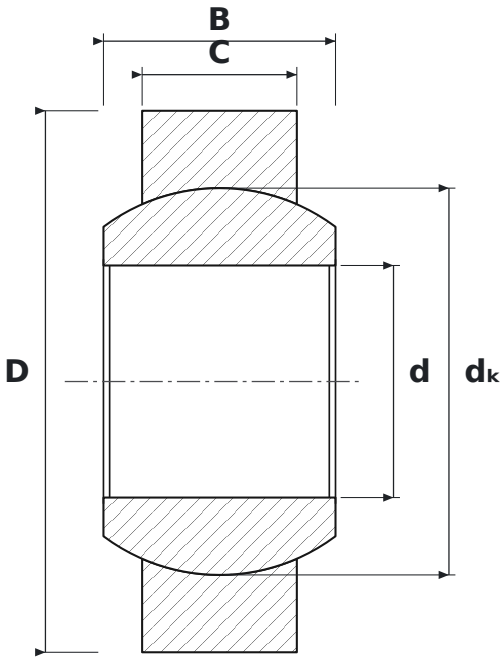

DIMENSIONS

d	bore diameter	**6 mm**
D	outside diameter	**14 mm**
B	inner ring (ball) width	**6 mm**
C	outer ring width	**4 mm**
dK	ball diameter	**10 mm**

SPECIFICATIONS

Manufacturer	**ZEN**
Manufacturer designation	**GE6 UK**
C – outer ring width	**4 mm**
Rolling elements	**plain bearing (no rolling elements)**