Spherical plain bearing GE63 LO INA

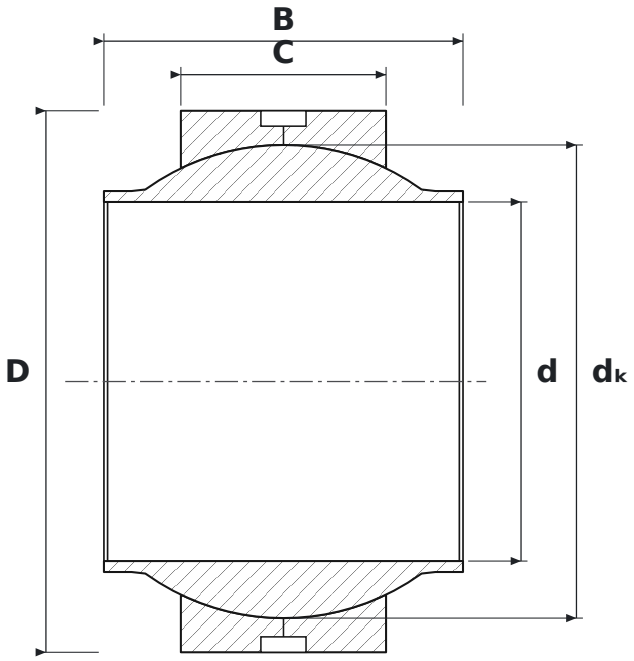

DIMENSIONS

d	bore diameter	**63 mm**
D	outside diameter	**95 mm**
B	inner ring (ball) width	**63 mm**
C	outer ring width	**36 mm**
dK	ball diameter	**83 mm**

SPECIFICATIONS

Manufacturer	**INA**
Manufacturer designation	**GE63 LO**
B – inner ring width	**63 mm**
C – outer ring width	**36 mm**
Rolling elements	**plain bearing (no rolling elements)**
Features	**Lubrication groove and holes**
Basic dynamic load rating C	**255 kN**
Basic static load rating C0	**1,270 kN**