Spherical plain bearing GE65 SX ZEN

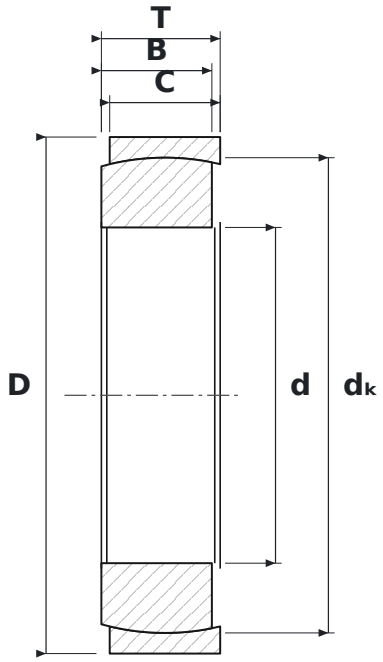

DIMENSIONS

d	bore diameter	**65 mm**
D	outside diameter	**100 mm**
T	total width	**23 mm**
B	inner ring (ball) width	**23 mm**
dK	ball diameter	**92 mm**

SPECIFICATIONS

Manufacturer	**ZEN**
Manufacturer designation	**GE65 SX**
Rolling elements	**plain bearing (no rolling elements)**
Features	**Lubrication groove and holes**