Spherical plain bearing GE80 HO2RS INA

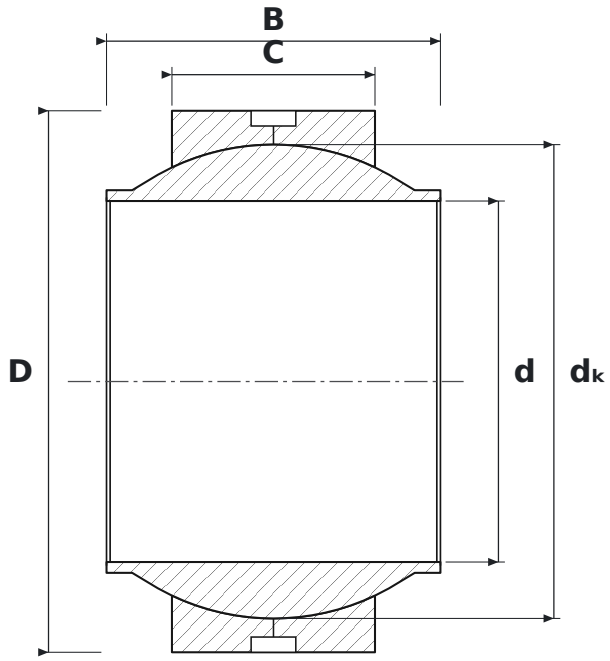

DIMENSIONS

d	bore diameter	**80 mm**
D	outside diameter	**120 mm**
B	inner ring (ball) width	**74 mm**
C	outer ring width	**45 mm**
dK	ball diameter	**105 mm**

SPECIFICATIONS

Manufacturer	**INA**
Manufacturer designation	**GE80 HO2RS**
B – inner ring width	**74 mm**
C – outer ring width	**45 mm**
Rolling elements	**plain bearing (no rolling elements)**
Features	**Lubrication groove and holes**
Basic dynamic load rating C	**400 kN**
Basic static load rating C0	**2,000 kN**