Spherical plain bearing GE90 ES NKE

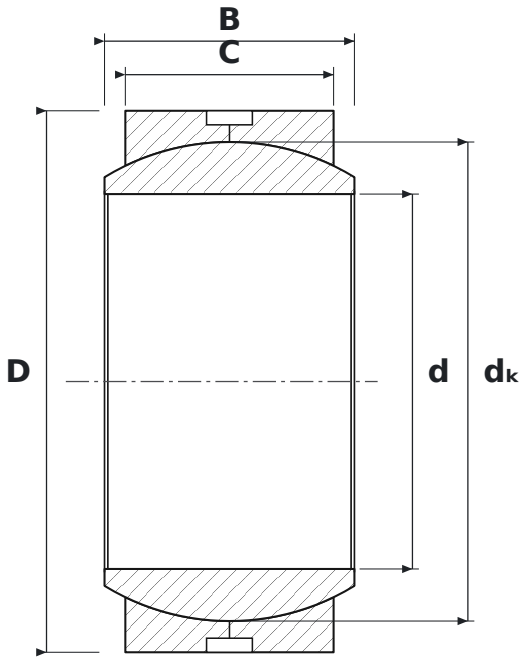

DIMENSIONS

d	bore diameter	**90 mm**
D	outside diameter	**130 mm**
B	inner ring (ball) width	**60 mm**
C	outer ring width	**50 mm**
dK	ball diameter	**115 mm**

SPECIFICATIONS

Manufacturer	**NKE**
Manufacturer designation	**GE90 ES**
C – outer ring width	**50 mm**
Rolling elements	**plain bearing (no rolling elements)**
Features	**Lubrication groove and holes**