Spherical plain bearing GEG12 ESA SKF

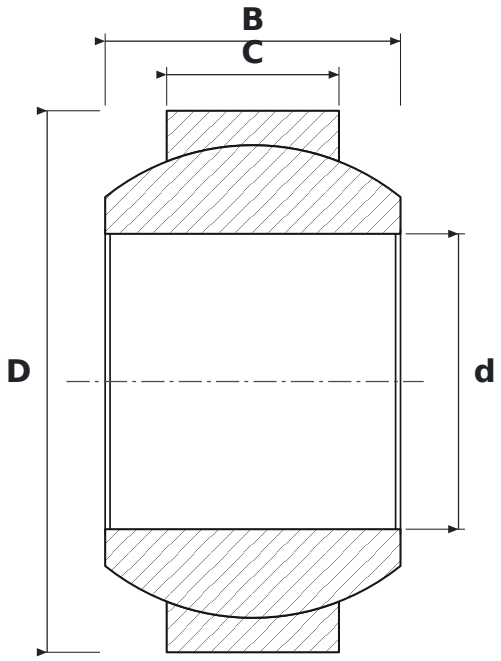

DIMENSIONS

d	bore diameter	**12 mm**
D	outside diameter	**22 mm**
B	inner ring (ball) width	**12 mm**
C	outer ring width	**7 mm**

SPECIFICATIONS

Manufacturer	**SKF**
Manufacturer designation	**GEG12 ESA**
C – outer ring width	**7 mm**
Rolling elements	**plain bearing (no rolling elements)**