Spherical plain bearing GEH40 TXE-2LS SKF

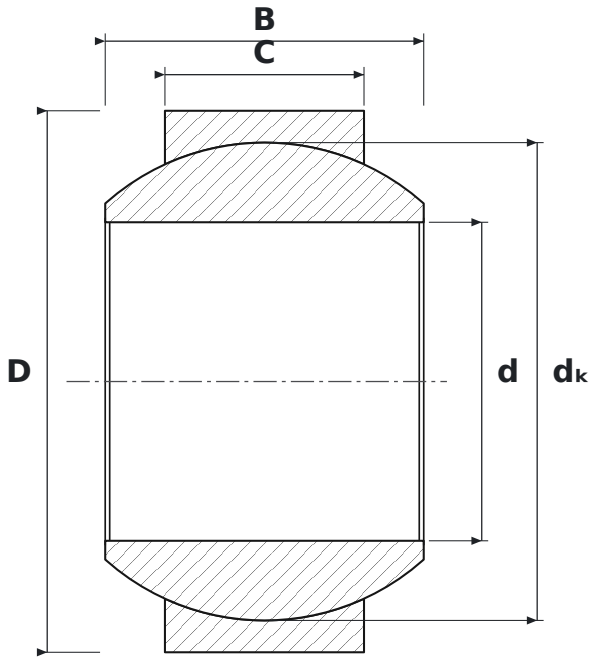

DIMENSIONS

d	bore diameter	**40 mm**
D	outside diameter	**68 mm**
B	inner ring (ball) width	**40 mm**
C	outer ring width	**25 mm**
dK	ball diameter	**60 mm**

SPECIFICATIONS

Manufacturer	**SKF**
Manufacturer designation	**GEH40 TXE-2LS**
C – outer ring width	**25 mm**
Rolling elements	**plain bearing (no rolling elements)**
Mass	**0.52 kg**