Spherical plain bearing GEM60 ES2RS SKF

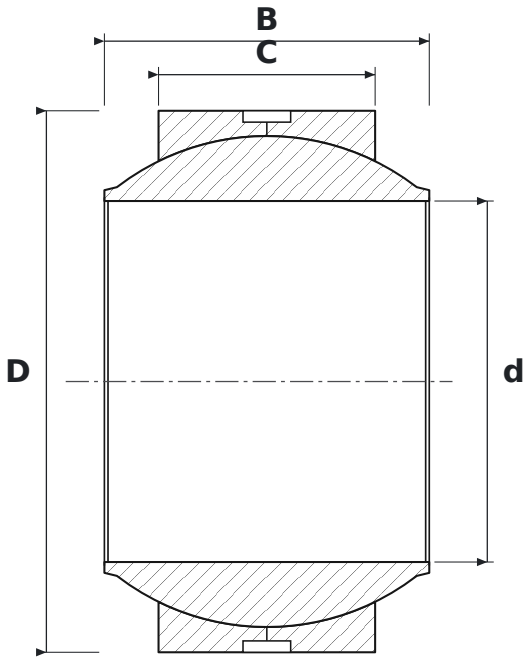

DIMENSIONS

d	bore diameter	**60 mm**
D	outside diameter	**90 mm**
B	inner ring (ball) width	**54 mm**
C	outer ring width	**36 mm**

SPECIFICATIONS

Manufacturer	**SKF**
Manufacturer designation	**GEM60 ES2RS**
C – outer ring width	**36 mm**
Rolling elements	**plain bearing (no rolling elements)**
Features	**Lubrication groove and holes**