Spherical plain bearing GEZ012 ES SKF

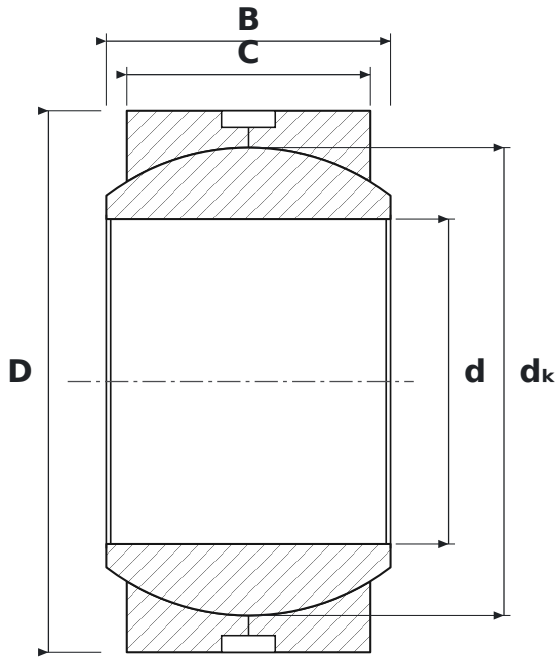

DIMENSIONS

d	bore diameter	**19.05 mm**
D	outside diameter	**31.75 mm**
B	inner ring (ball) width	**16.66 mm**
C	outer ring width	**14.28 mm**
dK	ball diameter	**27.43 mm**

SPECIFICATIONS

Manufacturer	**SKF**
Manufacturer designation	**GEZ012 ES**
C – outer ring width	**14.28 mm**
Rolling elements	**plain bearing (no rolling elements)**
E	**reinforced design, higher load rating**
Seal	**open – no seals**
Features	**Lubrication groove and holes**
Mass	**0.053 kg**