Spherical plain bearing GEZ200 ES SKF

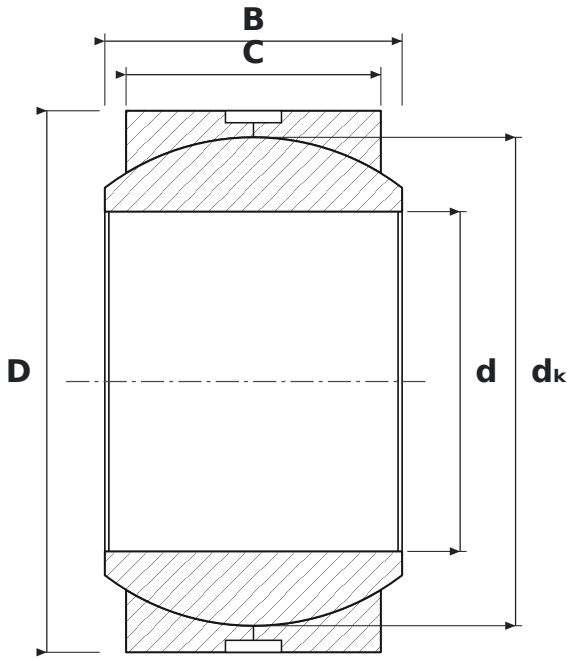

DIMENSIONS

d	bore diameter	**50.8 mm**
D	outside diameter	**80.96 mm**
B	inner ring (ball) width	**44.45 mm**
C	outer ring width	**38.1 mm**
dK	ball diameter	**73.03 mm**

SPECIFICATIONS

Manufacturer	**SKF**
Manufacturer designation	**GEZ200 ES**
C – outer ring width	**38.1 mm**
Rolling elements	**plain bearing (no rolling elements)**
E	**reinforced design, higher load rating**
Seal	**open – no seals**
Features	**Lubrication groove and holes**