Spherical plain bearing GEZ300 ES SKF

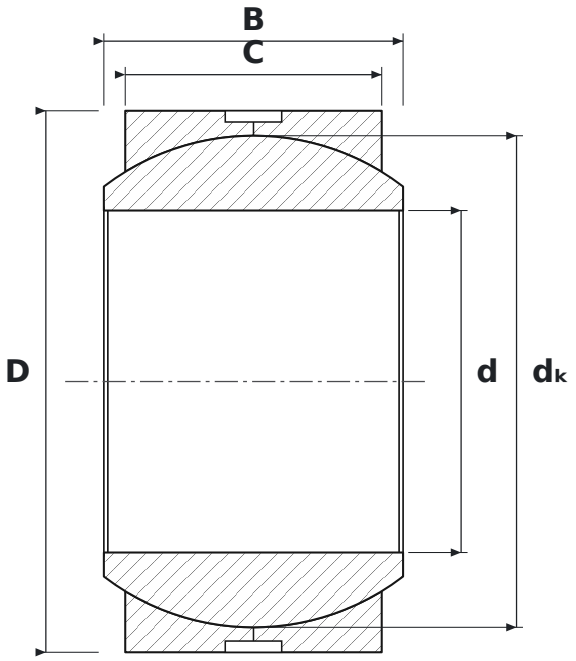

DIMENSIONS

d	bore diameter	**76.2 mm**
D	outside diameter	**120.65 mm**
B	inner ring (ball) width	**66.68 mm**
C	outer ring width	**57.15 mm**
dK	ball diameter	**109.53 mm**

SPECIFICATIONS

Manufacturer	**SKF**
Manufacturer designation	**GEZ300 ES**
C – outer ring width	**57.15 mm**
Rolling elements	**plain bearing (no rolling elements)**
E	**reinforced design, higher load rating**
Seal	**open – no seals**
Features	**Lubrication groove and holes**