Spherical plain bearing GX100 F SKF

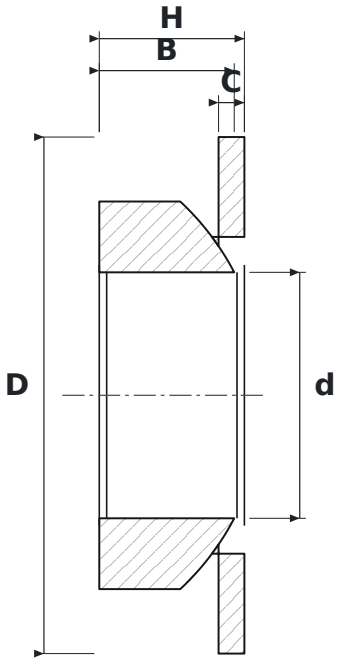

DIMENSIONS

d	bore diameter	**100 mm**
D	outside diameter	**210 mm**
H	height	**59 mm**
B	inner ring (ball) width	**59 mm**
C	outer ring width	**10.5 mm**

SPECIFICATIONS

Manufacturer	**SKF**
Manufacturer designation	**GX100 F**
C – outer ring width	**10.5 mm**
Rolling elements	**plain bearing (no rolling elements)**
Seal	**open – no seals**