Spherical plain bearing GX20 F SKF

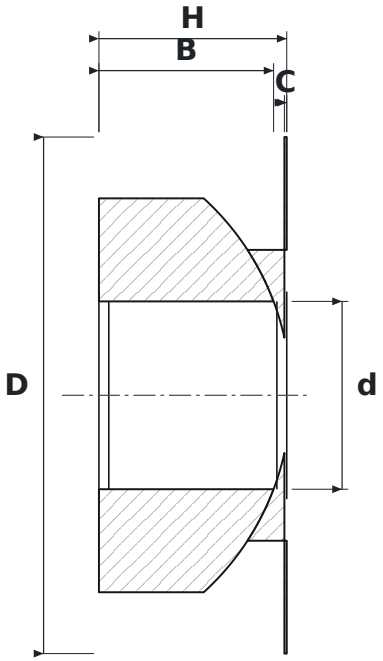

DIMENSIONS

d	bore diameter	**20 mm**
D	outside diameter	**55 mm**
H	height	**20 mm**
B	inner ring (ball) width	**20 mm**
C	outer ring width	**0.25 mm**

SPECIFICATIONS

Manufacturer	**SKF**
Manufacturer designation	**GX20 F**
C – outer ring width	**0.25 mm**
Rolling elements	**plain bearing (no rolling elements)**