Spherical plain bearing GX45 F SKF

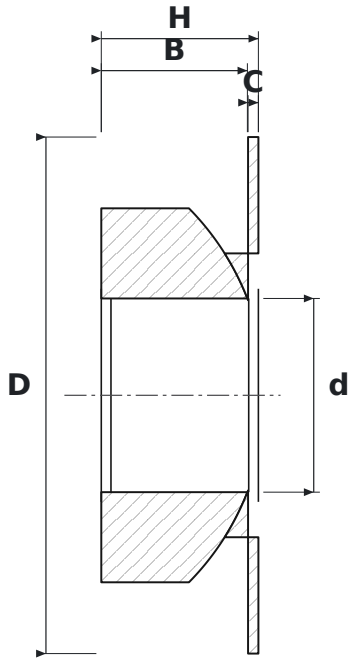

DIMENSIONS

d	bore diameter	**45 mm**
D	outside diameter	**120 mm**
H	height	**36.5 mm**
B	inner ring (ball) width	**36.5 mm**
C	outer ring width	**2.4 mm**

SPECIFICATIONS

Manufacturer	**SKF**
Manufacturer designation	**GX45 F**
C – outer ring width	**2.4 mm**
Rolling elements	**plain bearing (no rolling elements)**