Spherical plain bearing GX50 F SKF

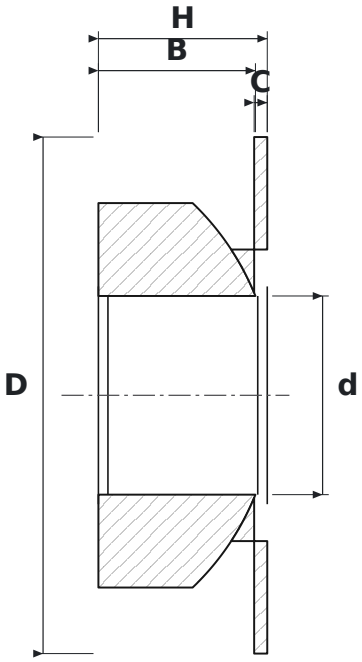

DIMENSIONS

d	bore diameter	**50 mm**
D	outside diameter	**130 mm**
H	height	**42.5 mm**
B	inner ring (ball) width	**42.5 mm**
C	outer ring width	**3.3 mm**

SPECIFICATIONS

Manufacturer	**SKF**
Manufacturer designation	**GX50 F**
C – outer ring width	**3.3 mm**
Rolling elements	**plain bearing (no rolling elements)**
Mass	**3.2 kg**