# Spherical plain bearing GXSW16.32 FLURO

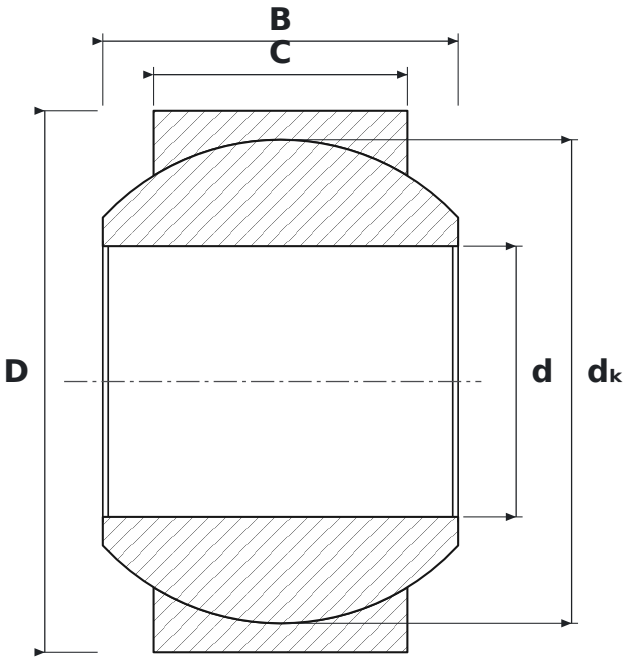


## DIMENSIONS

| | | |
|---|---|---|
| **d** | bore diameter | **16 mm** |
| **D** | outside diameter | **32 mm** |
| **B** | inner ring (ball) width | **21 mm** |
| **C** | outer ring width | **15 mm** |
| **dK** | ball diameter | **28.58 mm** |

## SPECIFICATIONS

| | |
|---|---|
| Manufacturer | **FLURO** |
| Manufacturer designation | **GXSW16.32** |
| C – outer ring width | **15 mm** |
| Rolling elements | **plain bearing (no rolling elements)** |