Spherical plain bearing SB10 TESCUBAL

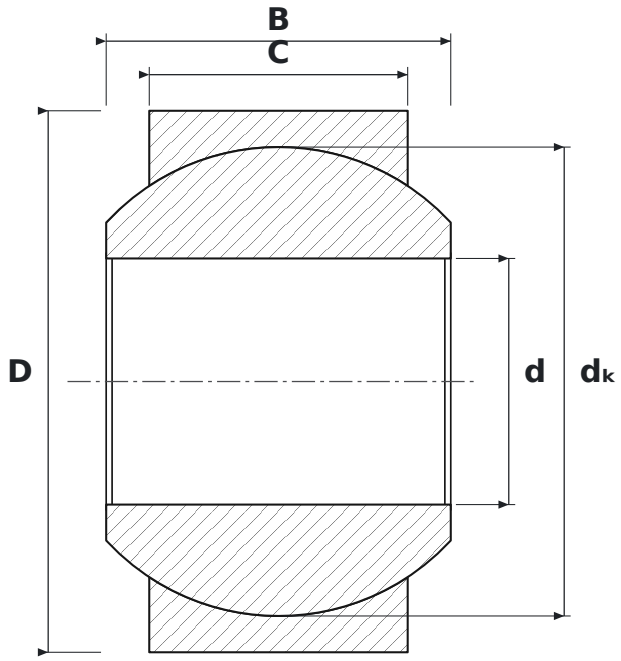

DIMENSIONS

d	bore diameter	**10 mm**
D	outside diameter	**22 mm**
B	inner ring (ball) width	**14 mm**
C	outer ring width	**10.5 mm**
dK	ball diameter	**19.05 mm**

SPECIFICATIONS

Manufacturer	**TESCUBAL**
Manufacturer designation	**SB10**
C – outer ring width	**10.5 mm**
Rolling elements	**plain bearing (no rolling elements)**