Spherical plain bearing SB35 TESCUBAL

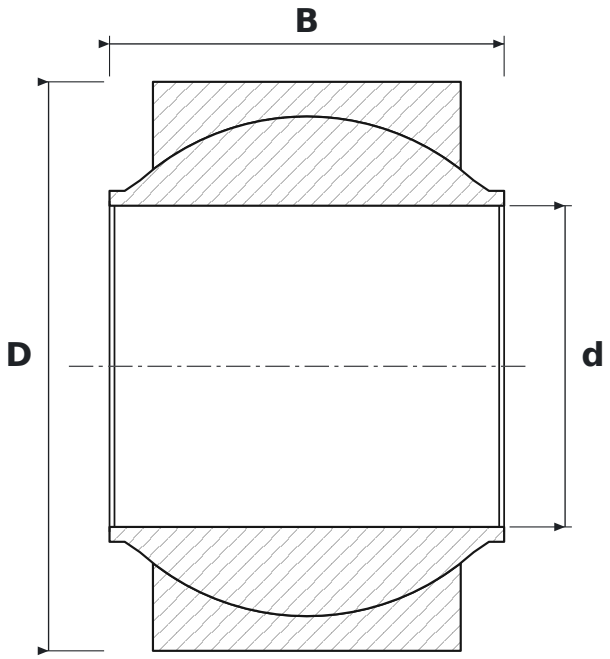

DIMENSIONS

d	bore diameter	**35 mm**
D	outside diameter	**62 mm**
B	inner ring (ball) width	**43 mm**

SPECIFICATIONS

Manufacturer	**TESCUBAL**
Manufacturer designation	**SB35**
Rolling elements	**plain bearing (no rolling elements)**