Spherical plain bearing SB6 OK TESCUBAL

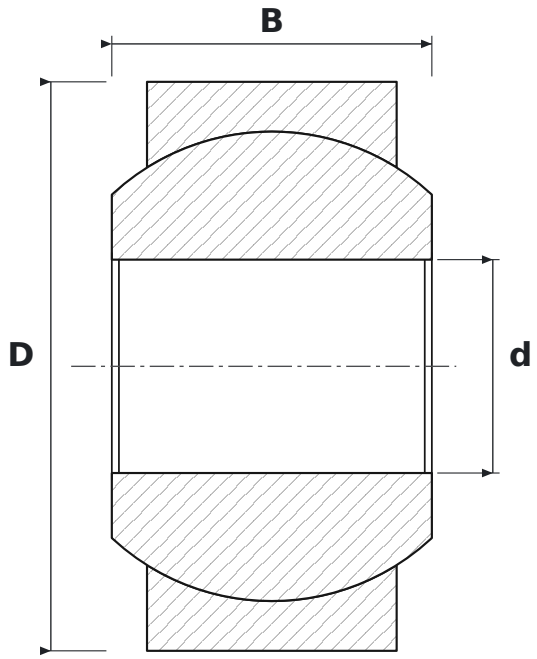

DIMENSIONS

d	bore diameter	**6 mm**
D	outside diameter	**16 mm**
B	inner ring (ball) width	**9 mm**

SPECIFICATIONS

Manufacturer	**TESCUBAL**
Manufacturer designation	**SB6 OK**
Rolling elements	**plain bearing (no rolling elements)**