Spherical plain bearing SB8 TESCUBAL

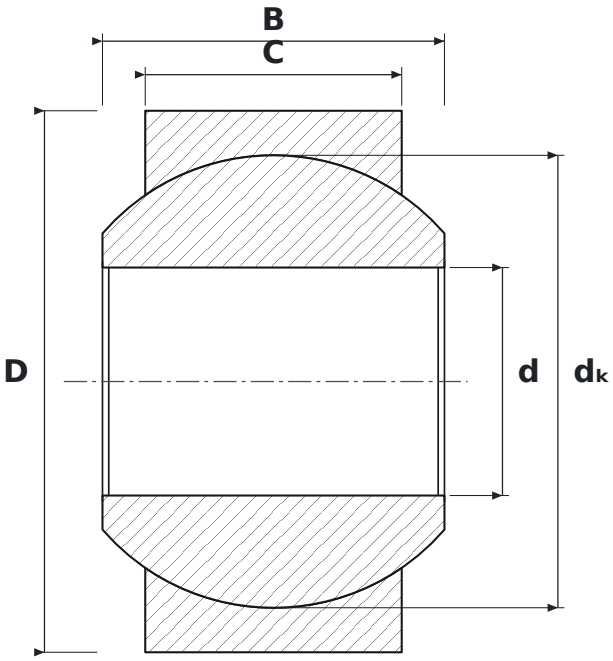

DIMENSIONS

d	bore diameter	**8 mm**
D	outside diameter	**19 mm**
B	inner ring (ball) width	**12 mm**
C	outer ring width	**9 mm**
dK	ball diameter	**15.88 mm**

SPECIFICATIONS

Manufacturer	**TESCUBAL**
Manufacturer designation	**SB8**
C – outer ring width	**9 mm**
Rolling elements	**plain bearing (no rolling elements)**