Tapered roller bearing 08125-99401 TIMKEN

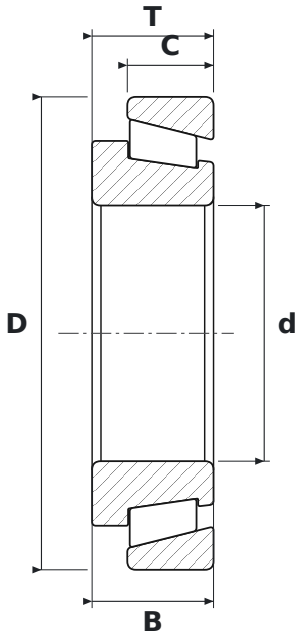

DIMENSIONS

d	bore diameter	**31.75 mm**
D	outside diameter	**58.74 mm**
T	total width	**15.08 mm**
B	inner ring width	**15.08 mm**
C	outer ring width	**10.72 mm**

SPECIFICATIONS

Manufacturer	**TIMKEN**
Manufacturer designation	**08125-99401**
B – inner ring width	**15.08 mm**
C – outer ring width	**10.72 mm**
Rolling elements	**tapered roller bearing**
Seal	**open – no seals**