Tapered roller bearing 24780R/20 KOYO

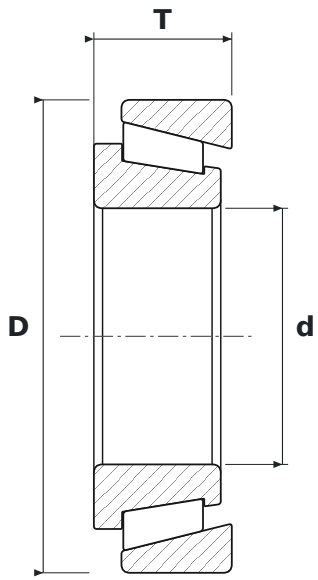

DIMENSIONS

d	bore diameter	**41.28 mm**
D	outside diameter	**76.2 mm**
T	total width	**22.23 mm**

SPECIFICATIONS

Manufacturer	**KOYO**
Manufacturer designation	**24780R/20**
Rolling elements	**tapered roller bearing**
Seal	**open – no seals**