CASTOMER

DATASHEET

Tapered roller bearing 25590/2/25520/2 Q SKF

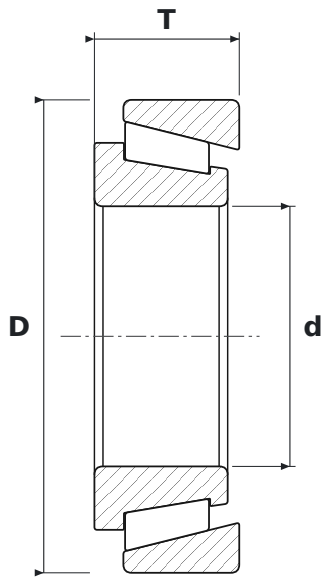

DIMENSIONS

d	bore diameter	**45.62 mm**
D	outside diameter	**82.93 mm**
T	total width	**25.4 mm**

SPECIFICATIONS

Manufacturer	**SKF**
Manufacturer designation	**25590/2/25520/2 Q**
Rolling elements	**tapered roller bearing**
Seal	**open – no seals**