Tapered roller bearing 28584/21 KOYO

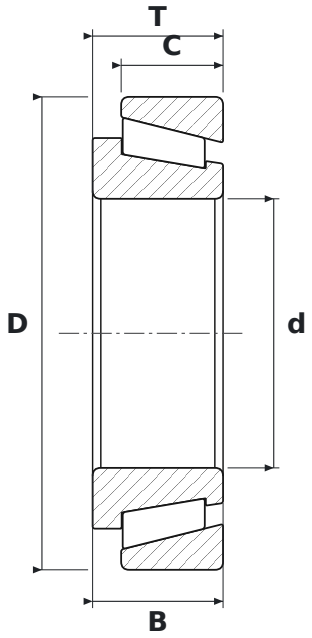

DIMENSIONS

d	bore diameter	**52.39 mm**
D	outside diameter	**92.08 mm**
T	total width	**25.4 mm**
B	inner ring width	**25.4 mm**
C	outer ring width	**19.85 mm**

SPECIFICATIONS

Manufacturer	**KOYO**
Manufacturer designation	**28584/21**
B – inner ring width	**25.4 mm**
C – outer ring width	**19.85 mm**
Rolling elements	**tapered roller bearing**
Seal	**open – no seals**