Tapered roller bearing 28682/22 KOYO

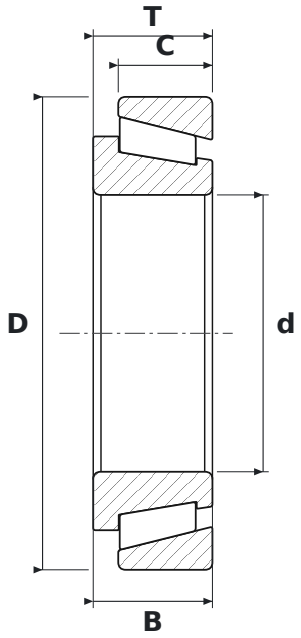

DIMENSIONS

d	bore diameter	**57.15 mm**
D	outside diameter	**97.63 mm**
T	total width	**24.61 mm**
B	inner ring width	**24.61 mm**
C	outer ring width	**19.45 mm**

SPECIFICATIONS

Manufacturer	**KOYO**
Manufacturer designation	**28682/22**
B – inner ring width	**24.61 mm**
C – outer ring width	**19.45 mm**
Rolling elements	**tapered roller bearing**
Seal	**open – no seals**