CASTOMER

DATASHEET

Tapered roller bearing 302/28 NSK

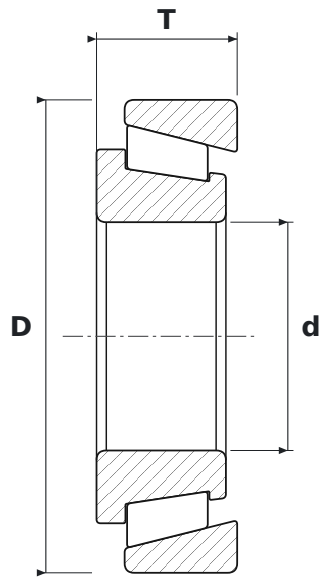

DIMENSIONS

d	bore diameter	**28 mm**
D	outside diameter	**58 mm**
T	total width	**17.25 mm**

SPECIFICATIONS

Manufacturer	**NSK**
Manufacturer designation	**302/28**
Rolling elements	**single-row tapered roller bearing**
Seal	**open – no seals**