Tapered roller bearing 30202 A SNR

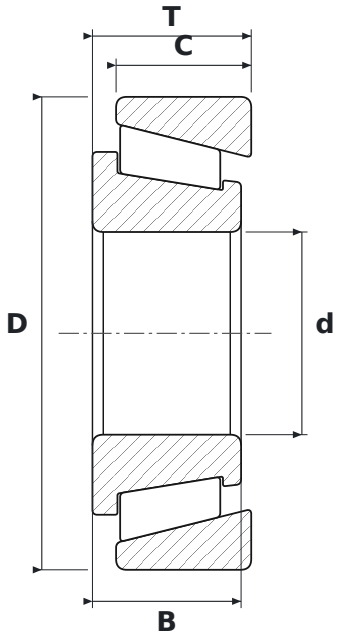

DIMENSIONS

d	bore diameter	**15 mm**
D	outside diameter	**35 mm**
T	total width	**11.75 mm**
B	inner ring width	**11 mm**
C	outer ring width	**10 mm**

SPECIFICATIONS

Manufacturer	**SNR**
Manufacturer designation	**30202 A**
B – inner ring width	**11 mm**
C – outer ring width	**10 mm**
Rolling elements	**single-row tapered roller bearing**
Seal	**open – no seals**