Tapered roller bearing 30205 J2Q SKF

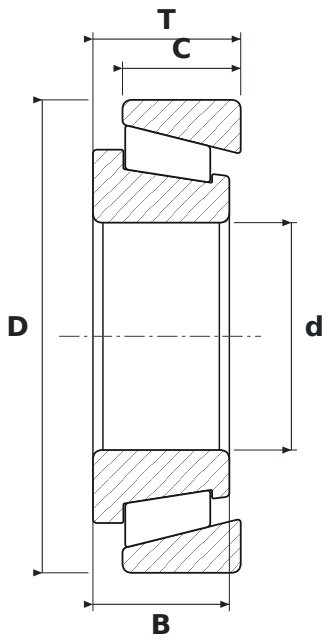

DIMENSIONS

d	bore diameter	**25 mm**
D	outside diameter	**52 mm**
T	total width	**16.25 mm**
B	inner ring width	**15 mm**
C	outer ring width	**13 mm**

WHAT 30205 J2Q MEANS

J2	two-piece pressed steel cage
Q	ulepszona geometria bieżni, korzystniejszy moment tarcia

SPECIFICATIONS

Manufacturer	**SKF**
Manufacturer designation	**30205 J2Q**
B – inner ring width	**15 mm**
C – outer ring width	**13 mm**
Rolling elements	**single-row tapered roller bearing**
Contact angle	**14°**