Tapered roller bearing 30206 NKE

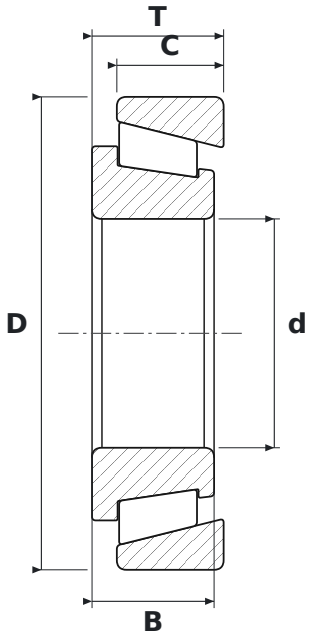

DIMENSIONS

d	bore diameter	**30 mm**
D	outside diameter	**62 mm**
T	total width	**17.25 mm**
B	inner ring width	**16 mm**
C	outer ring width	**14 mm**

SPECIFICATIONS

Manufacturer	**NKE**
Manufacturer designation	**30206**
B – inner ring width	**16 mm**
C – outer ring width	**14 mm**
Rolling elements	**single-row tapered roller bearing**
Seal	**open – no seals**
Mass	**0.24 kg**