Tapered roller bearing 30308 DJR KOYO

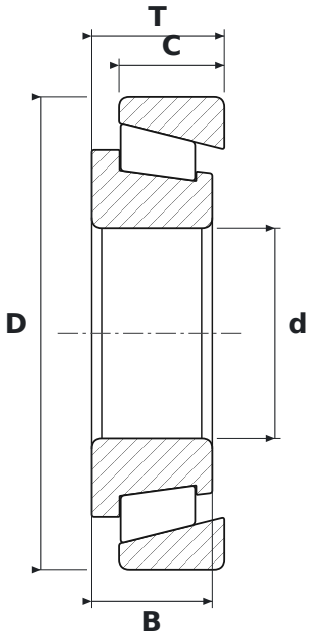

DIMENSIONS

d	bore diameter	**40 mm**
D	outside diameter	**90 mm**
T	total width	**25.25 mm**
B	inner ring width	**23 mm**
C	outer ring width	**20 mm**

SPECIFICATIONS

Manufacturer	**KOYO**
Manufacturer designation	**30308 DJR**
B – inner ring width	**23 mm**
C – outer ring width	**20 mm**
Rolling elements	**single-row tapered roller bearing**
JR	**riveted pressed steel cage (FAG)**
Seal	**open – no seals**