Tapered roller bearing 30314 JR KOYO

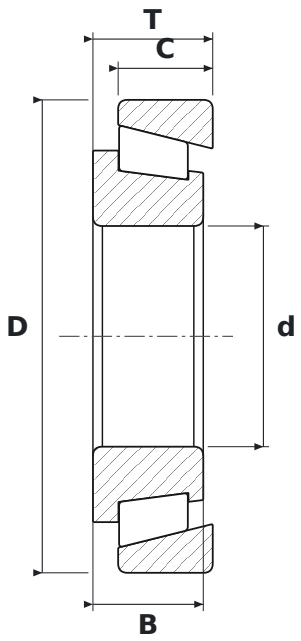

DIMENSIONS

d	bore diameter	**70 mm**
D	outside diameter	**150 mm**
T	total width	**38 mm**
B	inner ring width	**35 mm**
C	outer ring width	**30 mm**

SPECIFICATIONS

Manufacturer	**KOYO**
Manufacturer designation	**30314 JR**
B – inner ring width	**35 mm**
C – outer ring width	**30 mm**
Rolling elements	**single-row tapered roller bearing**
JR	**riveted pressed steel cage (FAG)**
Seal	**open – no seals**